RELIABILITY™

Provin

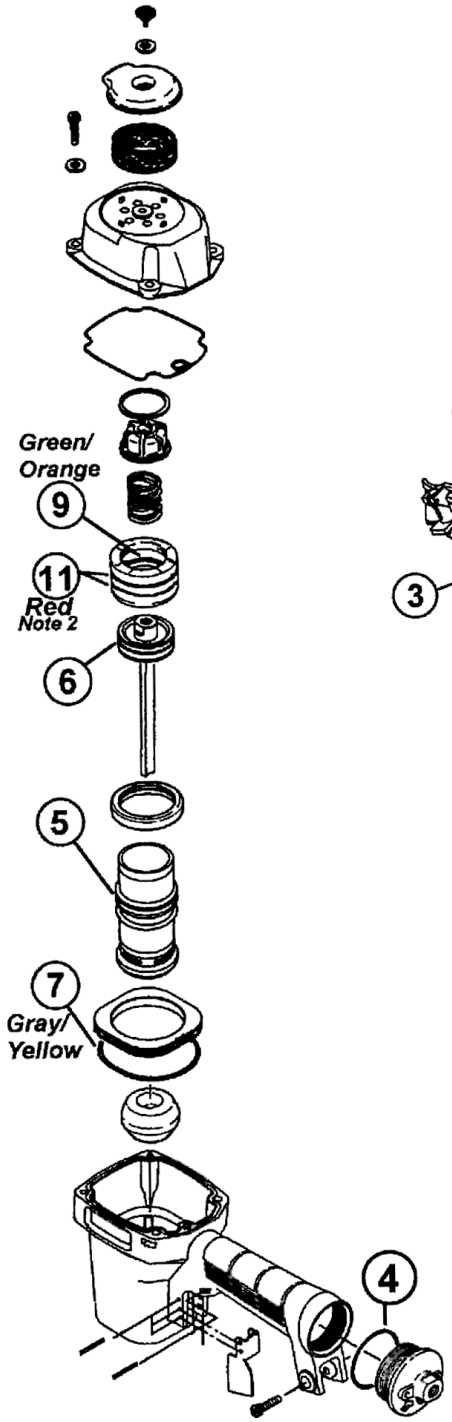

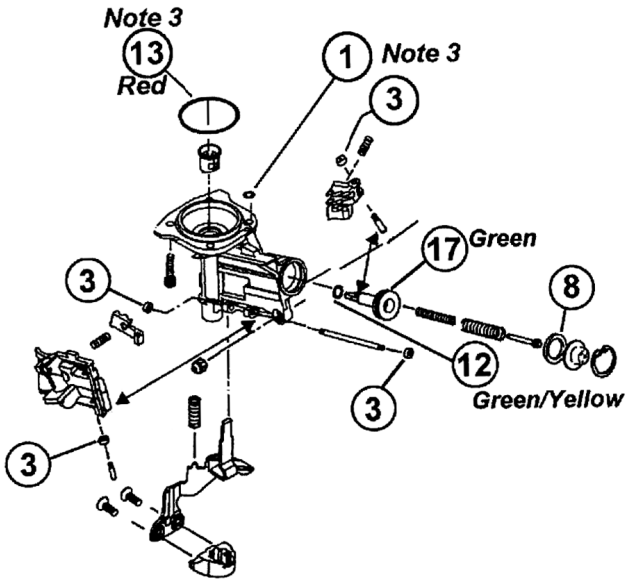

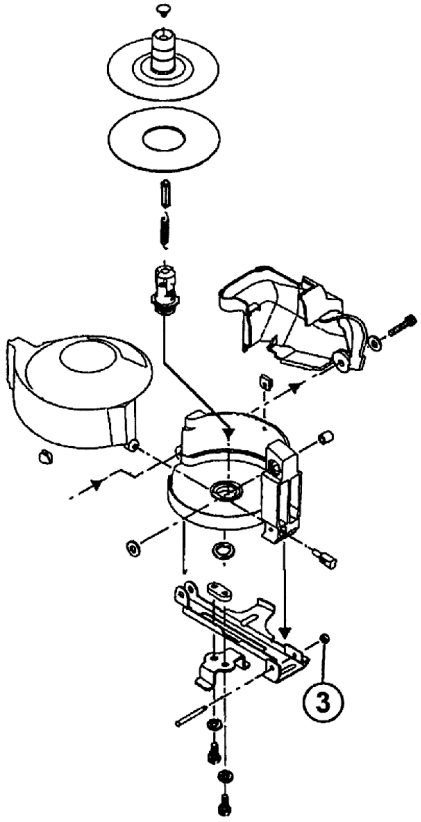

Contents of O-Ring Kit KT-BO-045

Key Number	Quantity	Performance Provin, Inc. Part Number	Color Code		Equivalent Bostitch® and/or Stan-Tech® Part Number
1	1	OR-PP-138		Note 3	MRG003617 / HH11160
2	1	OR-PP-156			86459
3	5	OR-PP-332S			N12112
4	1	OR-PP-380			850235
5	1	OR-PP-396			850006
6	1	OR-PP-568			850607 / MRG037735
7	1	OR-PP-1719	Gray/Yellow		100309
8	1	OR-PP-748S			N70162
9	1	OR-PP-1085	Green/Orange		MRG041630 / HH19142
10	1	OR-PP-929	Blue/Yellow		MRG008819 / HH11113
11	2	OR-PP-1008	Red	Note 2	MRG052526 / HH19200
12	1	OR-PP-1012	Green/Yellow		MRG009824 / HH11132
13	1	OR-PP-1023	Red	Note 3	RG198907-1
14	2	OR-PP-6293	Purple/Green		MRG002514 / HH11901
15	1	OR-PP-6219	Purple/Green		MRG005819 / HH11119
16	1	OR-PP-1116	Blue/Orange		MRG019824 / HH11138
17	1	OR-PP-1117	Green		851437
18	1	OR-PP-150			HH 11151
19	1	OR-PP-1316	Purple		MRG006819
20	1	OR-PP-1020	Blue		851554

Note 2: Quantity one O-Ring used on earlier issue tools.

Note 3: Some issue tools use a molded gasket in place of O-Rings to seal the nose piece to the tool housing.

*Generously grease all O-rings at time of assembly

Note:Read and understand the safety information printed on the reverse side before repairing any tools.
Nota: Lea y comprende la informacion de seguridad impresa al reverso antes de reparar cualquier herramienta.

5/16/2005	Exploded View and O-ring List for BOSTITCH RN45B & STAN-TECH SDCN10B	VL-BO-45

CAUTION CAUTION CAUTION

ALWAYS WEAR SAFETY GLASSES WITH SIDE SHIELDS WHEN USING PNEUMATICALLY OPERATED FASTENER DRIVING TOOLS

NEVER POINT THE TOOL AT YOURSELF OR ANYONE ELSE

NEVER BYPASS OR REMOVE ANY SAFETY DEVICE

ALWAYS FOLLOW THE ORIGINAL MANUFACTURE'S SAFETY AND SERVICE INSTRUCTION

NEVER ATTEMPT TO SERVICE OR REPAIR A PNEUMATICALLY OPERATED TOOL WITH THE COMPRESSES AIR LINE CONNECTED TO THE TOOL

NEVER LEAVE A PNEUMATICALLY OPERATED TOOL UNATTENDED WITH THE COMPRESSES AIR LINE CONNECTED

ALWAYS FOLLOW THE ORIGINAL TOOLS MANUFACTURE'S DISASSEMBLY, ASSEMBLY, AND TOOL INSPECTION PROCEDURES

PRECAUTION PRECAUTION PRECAUTION

SIEMPRE USE LENTES DE SEGURIDAD CON PROTECTORES LATERALES AL USAR HERRAMIENTAS DE IMPULSO CON SUJETADOR DE OPERACIÓN NEUMÁTICA

NUNCA APUNTE A SI MISMO O A OTRA PERSONA CON LA HERRAMIENTA

NUNCA EVITE O RETIRE ALGÚN DISPOSITIVO DE SEGURIDAD

SIEMPRE SIGA LAS INSTRUCCIONES DE SEGURIDAD Y SERVICIO DEL FABRICANTE ORIGINAL DE LA HERRAMIENTA

NUNCA INTENTE HACER MANTENIMIENTO O REPARAR UNA HERRAMIENTA DE OPERACIÓN NEUMÁTICA CON LA LINEA DE AIRE COMPRIMIDO CONNECTADA A LA HERRAMIENTA

NUNCA DEJE SIN ATENCION UNA HERRAMIENTA DE OPERACIÓN NEUMÁTICA CON LA LINEA DE AIRE COMPRIMIDO CONECTADA

SIEMPRE SIGE LOS PROCEDIMIENTOS DE DESMONTAJE, MONTAJE, E INSPECCIÓN DEL FABRICANTE ORIGINAL DE LA HERRAMIENTA

Trigger Valve Exploded View

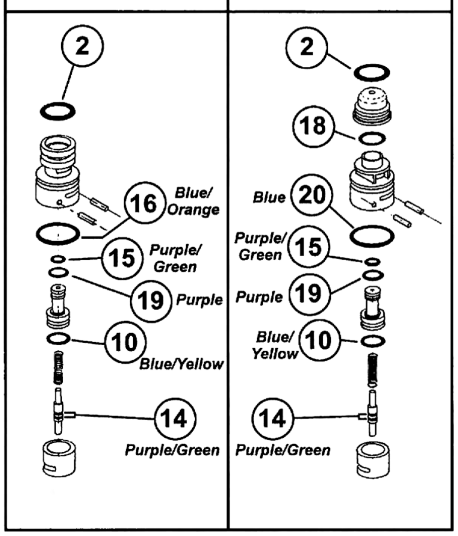

O-Ring Kit

KT-BO-045

For use on the following tool models.
Kit contains all O-Rings in these tools.

BOSTITCH	RN45B
	RN45B-1
	RN45B-2
STAN-TECH	SDCN10B

7 12218 00106 8